RRI-G50 ANGLE GRINDER

Exploded view

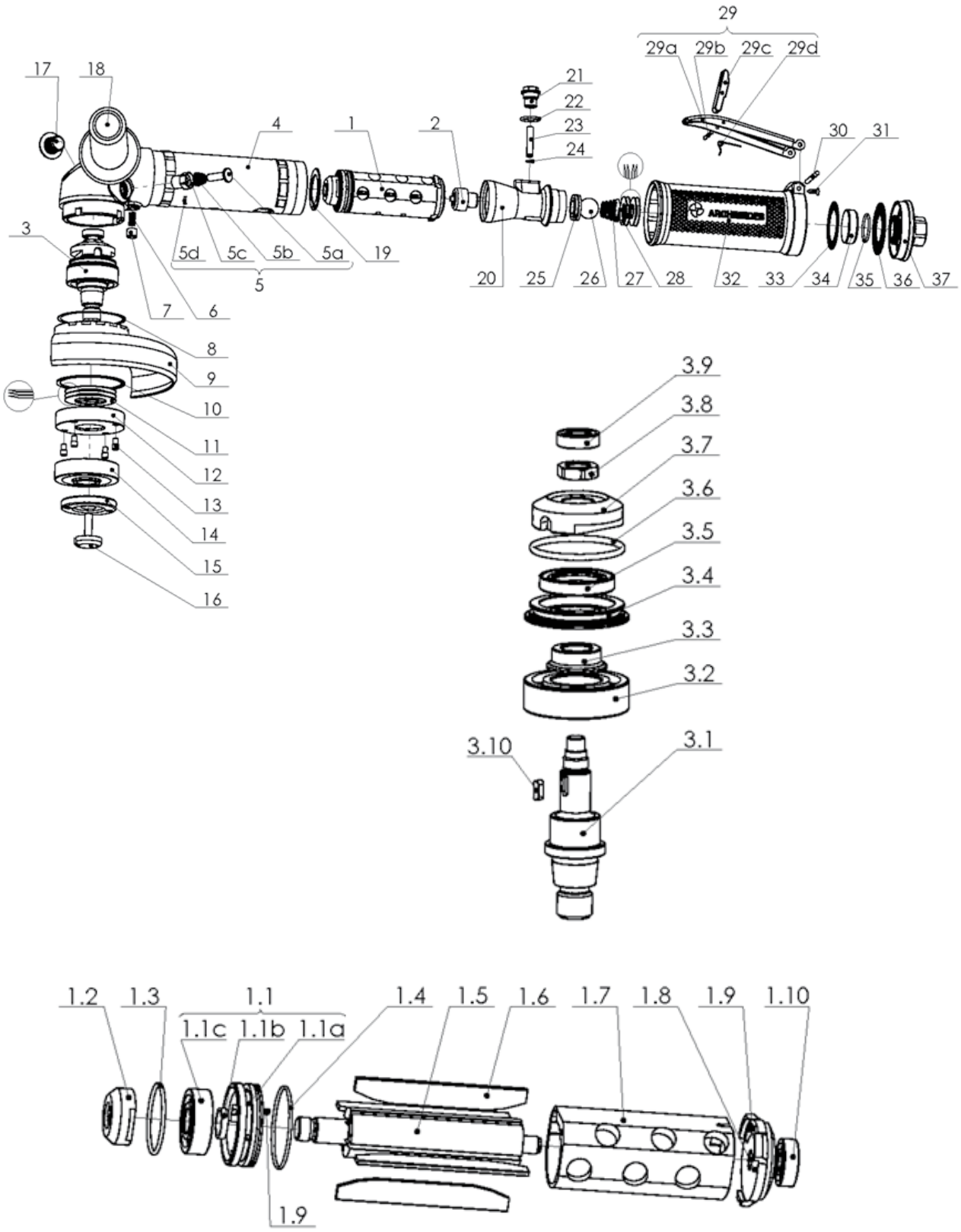

RRI-G50 ANGLE GRINDER

Index No.	Name of Part	Per Set	Part Number
1	Motor Assy	1	G50-0100-99
1.1	Upper plate Assy	1	G50-0101-99
1.1a	Upper Plate	1	G50-0101-01
1.1b	Rotor Ring	1	G50-0101-02
1.1c	Ball Bearing 6000 2RSL	1	G50-0101-03
1.2	Drive Pinion Set	1	G50-0102-99
1.3	O-ring 26x1.5	1	G50-0103-00
1.4	O-ring 30x1	1	G50-0104-00
1.5	Rotor	1	G50-0105-00
1.6	Rotor Blade	4	G50-0106-00
1.7	Cylinder	1	G50-0107-00
1.8	Lower Plate	1	G50-0108-00
1.9	Tension Pin 2h8x6-St	2	G50-0109-00
1.10	Ball Bearing 607-2RSL/C2	1	G50-0110-00
2	Regulator Set	1	G50-0200-99
3	Main Shaft Assy	1	G50-0300-99
3.1	Main Shaft	1	G50-0301-00
3.2	Ball Bearing 6004 2RSL/C2	1	G50-0302-00
3.3	Inside Ring	1	G50-0303-00
3.4	Outside Ring	1	G50-0304-00
3.5	Oil Seal CR20x30x5	1	G50-0305-00
3.6	O-ring 32x2	1	G50-0306-00
3.7	Drive Pinion Set	-	Index No. 1.2
3.8	Nut	1	G50-0308-00
3.9	Ball Bearing 619/7-2Z	1	G50-0309-00
3.10	Key A3x3x8	1	G50-0310-00
4	Motor Case	1	G50-0400-00
5	Spindel Lock Set	1	G50-0500-99
5a	Stop Button	1	G50-0501-00
5b	Spring	1	G50-0502-00
5c	Bushing	1	G50-0503-00
5d	Tension Pin 2h8x6-St	1	G50-0109-00
6	Spring	1	G50-0600-00
7	Stop Cover	1	G50-0700-00
8	Packing Ring	1	G50-0800-00
9	Wheel Cover	1	G50-0900-00
10	Lock Ring	1	G50-1000-00

Index No.	Name of Part	Per Set	Part Number
11	Plate Spring	3	G50-1100-00
12	Inner Flange	1	G50-1200-00
13	Screw	4	G50-1300-00
14	Balancer Ring	1	G50-1400-00
15	Outer Flange	1	G50-1500-00
16	Outer Wheel Screw	1	G50-1600-00
17	Screw M12x12	1	G50-1700-00
18	Vibration Reduced Handle	1	2400-046-11
19	C-Packing	1	G50-1900-00
20	Throttle Body	1	G50-2000-00
21	Throttle Bushing	1	G50-2100-00
22	O-ring 12x2	1	G50-2200-00
23	Throttle Rod	1	G50-2300-00
24	Snap Ring A5	1	G50-2400-00
25	Packing Ring	1	G50-2500-00
26	Ball 16	1	G50-2600-00
27	Throttle Spring	1	G50-2700-00
28	Plate Spring	4	G50-2800-00
29	Throttle Lever Assy	1	G50-2900-99
29a	Throttle Lever	1	G50-2900-01
29b	Tension Pin	1	G50-2900-02
29c	Safety Bar	1	G50-2900-03
29d	Spring	1	G50-2900-04
30	Tension Pin	1	G50-3000-00
31	Screw St2.9x9.5	1	G50-3100-00
32	Grip	1	G50-3200-00
33	Ring	1	G50-3300-00
34	Spacer	1	G50-3400-00
35	O-ring 19x1.5	1	G50-3500-00
36	Ring	1	G50-3600-00
37	Air Inlet	1	G50-3700-00
	Wrench set	1	G50-9000-99